NUMBER 179553

METRIC

(3rd ANGLE PROJECTION)

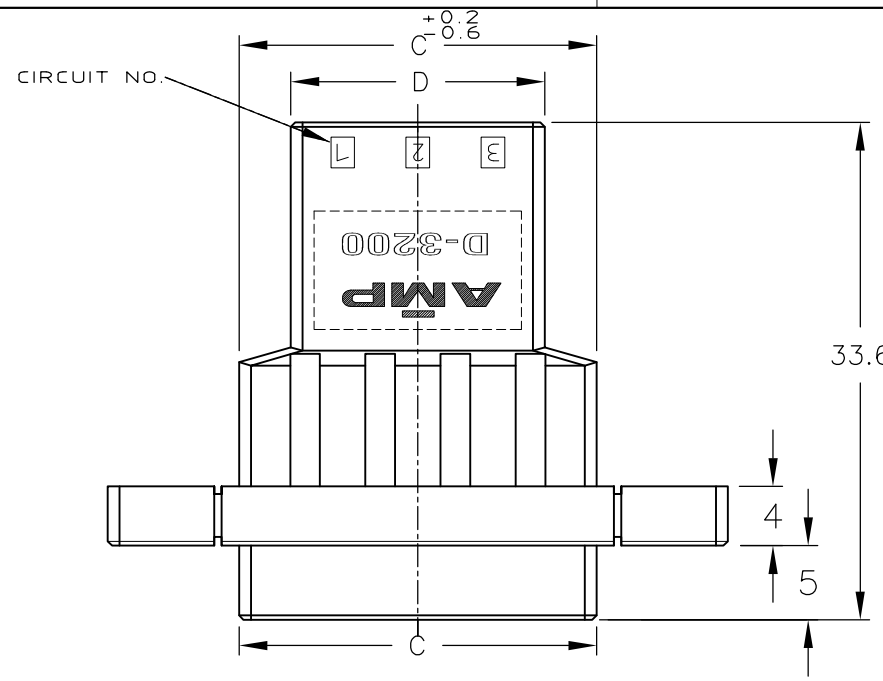

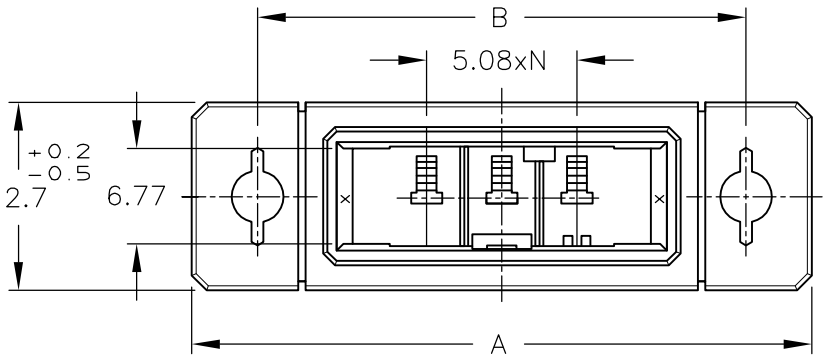

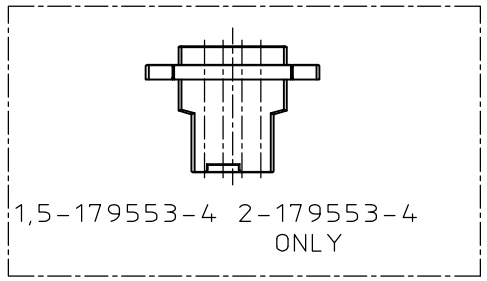

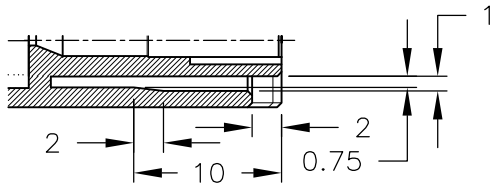

1,5-179553-2,2-179553-2 ONLY

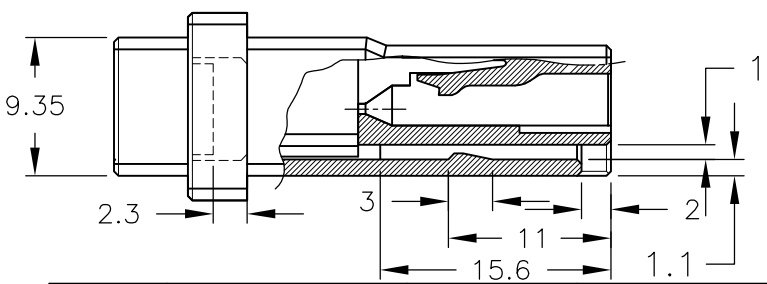

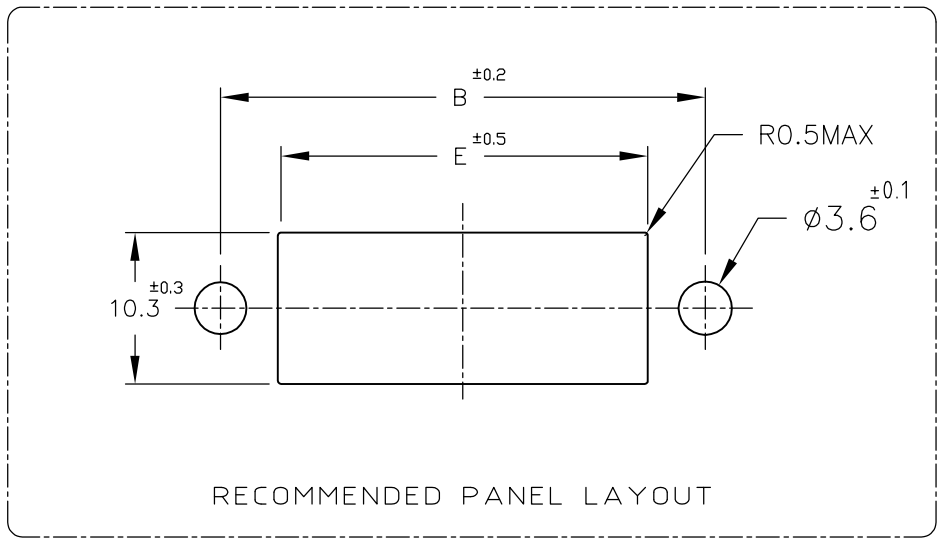

RECOMMENDED PANEL LAYOUT

NOTES

1 MATERIAL:GLASS FIELD THERMO PLASTIC,POLYESTER
COLOR;BLACK

~~2 TO COAT ALL SURFACE OF HOUSING WITH TEFLON~~

3 PRODUCT SPEC:108-5349

4 PANEL ATTACHMENT RECOMMENDATION M3 SCREW

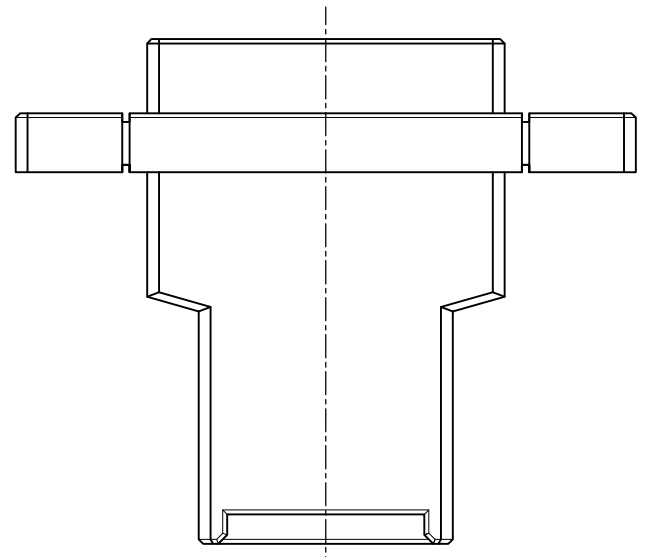

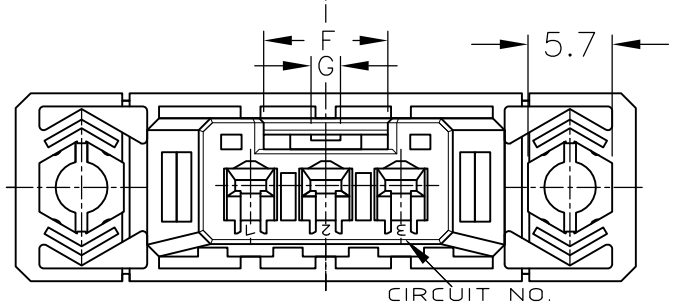

	FINISH	KEYING PATTERN	POS. / DIMENSION	A	B	C	D	E	F	G	N	KEY	PART NUMBER
OBSOLETE	2		4	46.99	38	29.24	22.24	30	8.4	2	3	X	5-179553-4
	—		4	46.99	38	29.24	22.24	30	8.4	2	3	Y	2-179553-4
	—		4	46.99	38	29.24	22.24	30	8.4	2	3	X	1-179553-4
OBSOLETE	2		3	41.91	33	24.16	17.16	25	8.4	2	2	Y	6-179553-3
OBSOLETE	2		3	41.91	33	24.16	17.16	25	8.4	2	2	X	5-179553-3
	—		3	41.91	33	24.16	17.16	25	8.4	2	2	Y	2-179553-3
	—		3	41.91	33	24.16	17.16	25	8.4	2	2	X	1-179553-3
OBSOLETE	2		2	36.83	28	19.08	12.08	20	8.4	2	1	X	5-179553-2
	—		2	36.83	28	19.08	12.08	20	8.4	2	1	Y	2-179553-2
	—		2	36.83	28	19.08	12.08	20	8.4	2	1	X	1-179553-2

LTR	(REVISION RECORD)	DR	CHK	DATE
H	REVISED	H.U	N.Y	24APR 12
G	REVISED PER ECR-11-012413	T.T	T.M	16JUN 11

TE Connectivity

(WIRE RANGE) — mm² (AWG -)

(INSULATION DIA.) — mmø

(MATERIAL) SEE NOTES

(FINISH)

DR. 31 JAN 94 N.Matsubara

DE. 31 JAN 94 N.Matsubara

CHK. 1 FEB 94 S.NANABE

APP. 1 FEB 94 S.NANABE

(NAME) WIRE TO WIRE TAB HSG FOR DYNAMIC D-3200S PANEL MOUNT TYPE

(GENERAL TOLERANCE)
≤10 : ±0.2
10≤30 : ±0.25
30≤100 : ±0.3
ANGLE : ±3'

SIZE A3 | LOC J | (No.) C-179553

(SCALE) 2/1 | REV. H | SHEET 1 OF 1

: DIMENSIONS IN MM. DO NOT SCALE PRINT

PRINT DIST

AMP-J
REV.10/'83